Work Order ID 66985

Thursday, March 03, 2011 10:01:59 AM

Item ID: D4323-17
Revision ID: PRELIM
Item Name: Cover

Accept

Setup Start
Stop

Start Date: 3/3/2011 **Start Qty:** 1.00
Required Date: 3/11/2011 **Req'd Qty:** 1.00
Reference:

Cust Item ID:
Customer:

POSITIVE RECALL

Approvals: **Process Plan:** H **Date:** 11-03-3 **Tooling:** **Date:**
QC: **Date:** **SPC (Y/N):** **Date:**

Run Start
Stop

Sequence ID/ Work Center ID	Operation Description	Set Up/ Run Hours	Tool ID	Tool #	Plan Code	Accept Qty	Reject Qty	Reject Number	Insp. Stamp
Draw Nbr	**Revision Nbr**								
D4323	~~PA1~~ A								
100		0.00							
HandThermo		0.00				x2			
Hand Finishing Thermoforming	**Memo** 1-Cut Sheet to required Blank size								11/03/01
105		0.00							
HandThermo	Dry Material	0.00				x2			
Hand Finishing Thermoforming	**Memo** Dry Sheet as per QSI022 KYDEX								11/03/01

Temp: 150° F
Time IN: 4:00 pm 11/02/28
Time OUT: 7:00 am 11/03/01

~~PRELIMINARY ISSUE~~

Dart Aerospace Ltd

W/O:		WORK ORDER CHANGES					
DATE	STEP	PROCEDURE CHANGE	By	Date	Qty	Approval Chief Eng / Prod Mgr	Approval QC Inspector

Part No: _____ **PAR #:** _____ **Fault Category:** _____ **NCR:** Yes No **DQA:** _____ **Date:** _____

Resolution: _____ **Disposition:** _____ **QA: N/C Closed:** _____ **Date:** _____

NCR:		WORK ORDER NON-CONFORMANCE (NCR)						
DATE	STEP	Description of NC Section A	Corrective Action Section B			Verification Section C	Approval Chief Eng	Approval QC Inspector
			Initial Chief Eng	Action Description Chief Eng	Sign & Date			

NOTE: Date & initial all entries

H:\fFORMS\Quality Assurance\approved QA\NCRWO RevE

Work Order ID 66985

Thursday, March 03, 2011 10:01:59 AM

Item ID: D4323-17
Revision ID: PRELIM
Item Name: Cover

Accept

Setup Start
Stop

Start Date: 3/3/2011 **Start Qty:** 1.00
Required Date: 3/11/2011 **Req'd Qty:** 1.00
Reference:

Cust Item ID:
Customer:

Run Start
Stop

Approvals: **Process Plan:** _____ **Date:** _____ **Tooling:** _____ **Date:** _____
QC: _____ **Date:** _____ **SPC (Y/N):** _____ **Date:** _____

Sequence ID/ Work Center ID	Operation Description	Set Up/ Run Hours	Tool ID	Tool #	Plan Code	Accept Qty	Reject Qty	Reject Number	Insp. Stamp
110		0.00							
Thermoform	**Memo**	0.00				x1	x1		DL 11/03/01
Thermoforming Machine	1-Machine Set-Up 2-Pre-heat Tool to required temp. 3-Thermoform as per Dwg D4323-17and Folio #FTA~~xxx~~ using tool DT9716 Dwg Rev: PA3 → PA4 NW Folio Rev: A.							PTO →	
120	QC2- Inspect parts off machine FAI/FAIB	0.00							
QC	**Memo**	0.00				x1			DL 11/03/01
Quality Control	Visuallly inspect part for proper formation and texture								
130	QC8- Inspect parts - second check	0.00							
QC	**Memo**	0.00				x1			
Quality Control									

8/03/07
-inspector to DAY
Dm only

Dart Aerospace Ltd

W/O:		WORK ORDER CHANGES					
DATE	STEP	PROCEDURE CHANGE	By	Date	Qty	Approval Chief Eng / Prod Mgr	Approval QC Inspector

Part No: D4323-17 PAR #: _____ Fault Category: _____ NCR: Yes No DQA: _____ Date: _____

Resolution: _____ Disposition: _____ QA: N/C Closed: _____ Date: _____

NCR: 66985		WORK ORDER NON-CONFORMANCE (NCR)						
DATE	STEP	Description of NC Section A	Corrective Action Section B			Verification Section C	Approval Chief Eng	Approval QC Inspector
			Initial Chief Eng	Action Description Chief Eng	Sign & Date			
11/03/01	110	Material Too THIN. R.L. Process/new Part.	MP 11/05/17	Pull Part Colder to create small RAD. Scrap & Replace 1 part	Dh. 11/03/01	MP 11/05/17	MP 11/05/17	8 11/03/07

NOTE: Date & initial all entries

H:\fFORMS\Quality Assurance\approved QA\NCRWO RevE

Work Order ID 66985

Thursday, March 03, 2011 10:01:59 AM

Item ID: D4323-17
Revision ID: PRELIM
Item Name: Cover

Accept

Setup **Start**
Stop

Start Date: 3/3/2011 **Start Qty:** 1.00
Required Date: 3/11/2011 **Req'd Qty:** 1.00
Reference:

Cust Item ID:
Customer:

Run **Start**
Stop

Approvals: **Process Plan:** _____ **Date:** _____ **Tooling:** _____ **Date:** _____
QC: _____ **Date:** _____ **SPC (Y/N):** _____ **Date:** _____

Sequence ID/ Work Center ID	Operation Description	Set Up/ Run Hours	Tool ID	Tool #	Plan Code	Accept Qty	Reject Qty	Reject Number	Insp. Stamp
140		0.00							
HandThermo	**Memo**	0.00				x1			DL 11/03/01
Hand Finishing Thermoforming	1-Trim to finished dimensions as per Dwg								
150	QC2- Inspect parts off machine FAI/FAIB	0.00							
QC	**Memo**	0.00				x1			DL 11/03/01
Quality Control	Complete FAI document								
160	QC5- Inspect part completeness to step on W/O	0.00 -inspector to Pay Dm only							
QC	**Memo**	0.00 Sw 03/03				(4)			
Quality Control									

Dart Aerospace Ltd

W/O:		WORK ORDER CHANGES					
DATE	STEP	PROCEDURE CHANGE	By	Date	Qty	Approval Chief Eng / Prod Mgr	Approval QC Inspector

Part No: _____ **PAR #:** _____ **Fault Category:** _____ **NCR:** Yes No **DQA:** _____ **Date:** _____

Resolution: _____ **Disposition:** _____ **QA: N/C Closed:** _____ **Date:** _____

NCR:		WORK ORDER NON-CONFORMANCE (NCR)						
DATE	STEP	Description of NC Section A	Corrective Action Section B			Verification Section C	Approval Chief Eng	Approval QC Inspector
			Initial Chief Eng	Action Description Chief Eng	Sign & Date			

NOTE: Date & initial all entries

H:\fFORMS\Quality Assurance\approved QA\NCRWO RevE

Work Order ID 66985

Thursday, March 03, 2011 10:01:59 AM

Item ID: D4323-17
Revision ID: PRELIM
Item Name: Cover

Accept

Setup Start
Stop

Start Date: 3/3/2011 **Start Qty:** 1.00
Required Date: 3/11/2011 **Req'd Qty:** 1.00
Reference:

Cust Item ID:
Customer:

Run Start
Stop

Approvals: **Process Plan:** _____ **Date:** _____ **Tooling:** _____ **Date:** _____
QC: _____ **Date:** _____ **SPC (Y/N):** _____ **Date:** _____

Sequence ID/ Work Center ID	Operation Description	Set Up/ Run Hours	Tool ID	Tool #	Plan Code	Accept Qty	Reject Qty	Reject Number	Insp. Stamp
170	Identify as per dwg & Stock Location:_____	0.00				11/3/85			
Packaging	**Memo**	0.00							
Packaging									
180	QC21- Final Inspection - Work Order Release	0.00						11/5/16	
QC	**Memo**	0.00							
Quality Control									

RD2370

MF
11-03-08

POSITIVE RECALL
EFFECTIVE 11-03-13 AUTH
RELEASED DATE 11/05/13

Dart Aerospace Ltd

W/O:		WORK ORDER CHANGES					
DATE	STEP	PROCEDURE CHANGE	By	Date	Qty	Approval Chief Eng / Prod Mgr	Approval QC Inspector

Part No: _____ **PAR #:** _____ **Fault Category:** _____ **NCR:** Yes No **DQA:** _____ **Date:** _____

Resolution: _____ **Disposition:** _____ **QA: N/C Closed:** _____ **Date:** _____

NCR:		WORK ORDER NON-CONFORMANCE (NCR)						
DATE	STEP	Description of NC Section A	Corrective Action Section B			Verification Section C	Approval Chief Eng	Approval QC Inspector
			Initial Chief Eng	Action Description Chief Eng	Sign & Date			

NOTE: Date & initial all entries

H:\fFORMS\Quality Assurance\approved QA\NCRWO RevE

Picklist Print

Thursday, March 03, 2011 10:02:05 AM

Work Order ID: 66985

Parent Item: D4323-17

Parent Item Name: Cover

Start Date: 3/3/2011 **Required Date:** 3/11/2011

Start Qty: 1.00 **Required Qty:** 1.00

Comments: New Issuse 11-03-01 DL

Component Item ID/ Item Name	Replacement Item ID	Mfg/ Purch	Bin Item	Primary Location	Last Location	Route Seq ID	Unit of Measure	Qty on Hand	Qty per Kit	Total Qty	Qty Issued	Date Issued	Status
MKYD6185S.080-P3-62015		Purchased	No			100	sf	1,019.537	4.6	4.842105			
6185 KYDEX .080"													

DL 11/03/04

Location	Loc Qty	Loc Code
therm	1019.537564	
109703	81.189115	
116576	938.348449	

4.6 sq ft.

Dart Aerospace Ltd

W/O:		WORK ORDER CHANGES					
DATE	STEP	PROCEDURE CHANGE	By	Date	Qty	Approval Chief Eng / Prod Mgr	Approval QC Inspector

Part No: _____ **PAR #:** _____ **Fault Category:** _____ **NCR:** Yes No **DQA:** _____ **Date:** _____

Resolution: _____ **Disposition:** _____ **QA: N/C Closed:** _____ **Date:** _____

NCR:		WORK ORDER NON-CONFORMANCE (NCR)						
DATE	STEP	Description of NC Section A	Corrective Action Section B			Verification Section C	Approval Chief Eng	Approval QC Inspector
			Initial Chief Eng	Action Description Chief Eng	Sign & Date			

NOTE: Date & initial all entries

H:\fFORMS\Quality Assurance\approved QA\NCRWO RevE

DART AEROSPACE LTD	Work Order:	66985
Description:	Part Number:	D4323-17
Inspection Dwg: D4323 Rev: PA4		Page 1 of 1

FIRST ARTICLE INSPECTION CHECKLIST

THERMOFORMING SECTION

Description	Accept	Reject	Method of Inspection	Comments
Inside Radii less than ½ "	✓			
Shape Definition	✓			
Texture Retention	✓			
Material imperfections such as bumps, cracks, voids, scratching	✓			

Measured by:	DL	Date:	11/03/04

TRIMMING SECTION

Drawing Dimension	Tolerance	Actual Dimension	Accept	Reject	Method of Inspection	Comments
ø 14.8"	+/- 0.100	14.750"	✓		ED-11	
ø 10.8"	+/- 0.100	10.870"	✓		"	
14.8"	+/- 0.100	14.750	✓		"	
9.9"	+/- 0.100	10.8"	✓		"	
8.6"	+/- 0.100	8.80"	✓		"	
R. 0.5"	MAX.	0.5	✓		"	
0.040"	MIN.	0.049	✓		ED-00326	

Measured by:	DL	Date:	11/03/07
Audited by:	to PAC/Dunlop	Date:	11/8/07
Preliminary Approval:		Date:	

Rev	Date	Change	Revised by	Approved
B	10.04.14	Added preliminary approval	KJ	

10.04.14

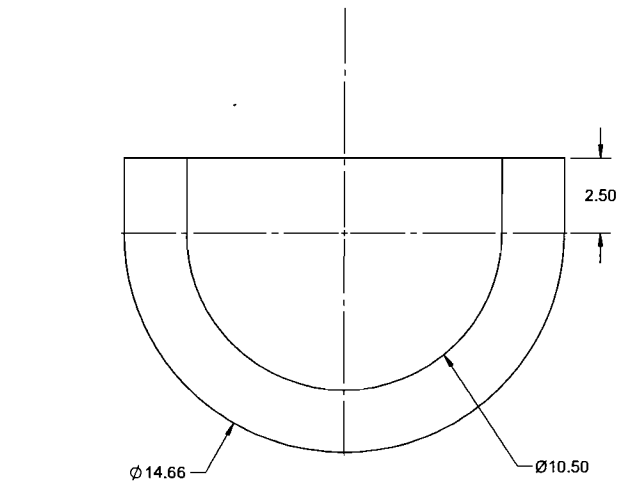

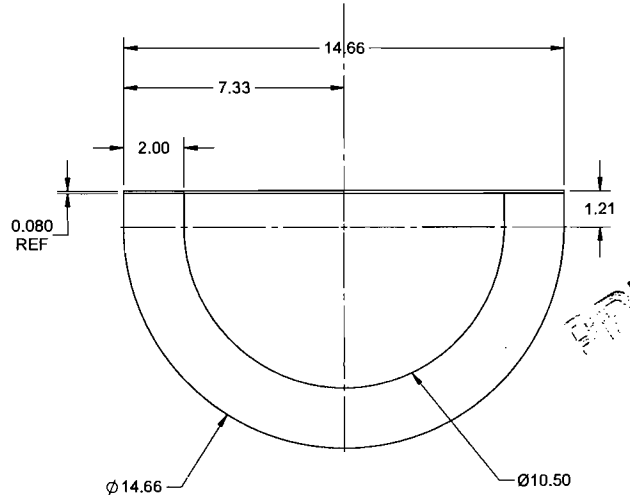

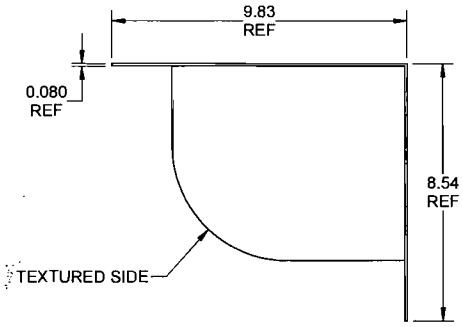

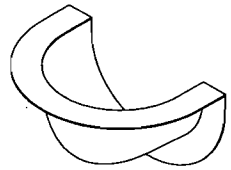

SHOP COPY
RETURN TO
ENGINEERING
UNCONTROLLED COPY
SUBJECT TO AMENDMENT
WITHOUT NOTICE
WORK ORDER
NO. 66985
pl 11-03-3

PRELIMINARY ISSUE

NOTES:
1) MATERIAL: KYDEX 6185, 0.080 THICK, P1-HAIRCELL, IVORY #62015
REF DART SPEC MKYD6185S.080-P1-62015
2) FINISH: NONE
3) TOLERANCES: PER DART QSI 018 UNLESS OTHERWISE NOTED
4) UNITS: INCHES UNLESS OTHERWISE NOTED
5) BREAK SHARP EDGES: 0.005 TO 0.010 MAX
6) IDENTIFICATION: IDENTIFY PER QSI 044 6.4
7) WEIGHT: 12.30 lbs
8) TOOLING: THERMOFORM -17 PART PER MOLD DT9716. TRIM PER MOLD

D4323-17 COVER

DESIGN		**DART AEROSPACE LTD** HAWKESBURY, ONTARIO, CANADA
DRAWN	JC	
CHECKED		DRAWING NO. D4323 — REV. PA3 — SHEET 9 OF 11
MFG. APPR.		
APPROVED		TITLE: PANEL — SCALE: NTS
DE APPR.		
DATE 11.02.09		

COPYRIGHT © 2011 BY DART AEROSPACE LTD
THIS DOCUMENT IS PRIVATE AND CONFIDENTIAL AND IS SUPPLIED ON THE EXPRESS CONDITION THAT IT IS NOT TO BE USED FOR ANY PURPOSE OR COPIED OR COMMUNICATED TO ANY OTHER PERSON WITHOUT WRITTEN PERMISSION FROM DART AEROSPACE LTD.

Dart Aerospace Ltd

W/O:		WORK ORDER CHANGES					
DATE	STEP	PROCEDURE CHANGE	By	Date	Qty	Approval Chief Eng / Prod Mgr	Approval QC Inspector

Part No: _____ **PAR #:** _____ **Fault Category:** _____ **NCR:** Yes No **DQA:** _____ **Date:** _____

Resolution: _____ **Disposition:** _____ **QA: N/C Closed:** _____ **Date:** _____

NCR:		WORK ORDER NON-CONFORMANCE (NCR)						
DATE	STEP	Description of NC Section A	Corrective Action Section B			Verification Section C	Approval Chief Eng	Approval QC Inspector
			Initial Chief Eng	Action Description Chief Eng	Sign & Date			

NOTE: Date & initial all entries

H:\fFORMS\Quality Assurance\approved QA\NCRWO RevE

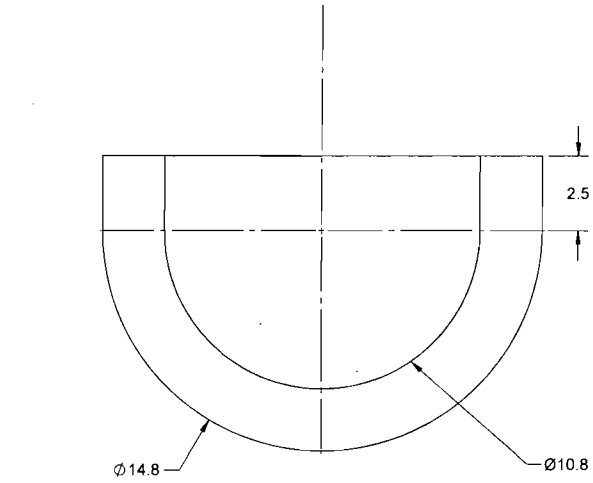

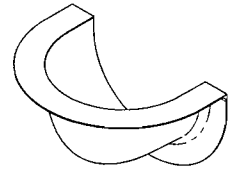

PRELIMINARY ISSUE

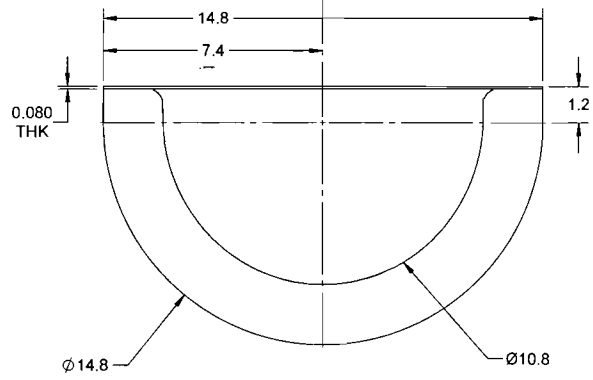

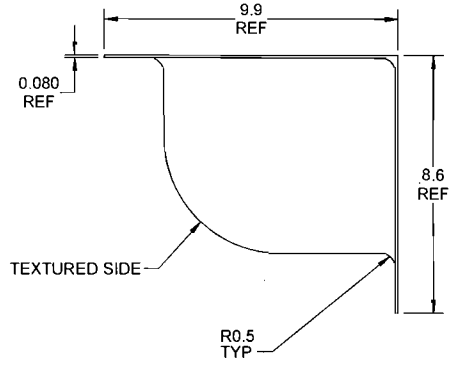

NOTES:
1) MATERIAL: KYDEX 6185, 0.080 THICK, P3-VELOUR MATTE, IVORY #62015
REF DART SPEC MKYD6185S.080-P3-62015
2) FINISH: NONE
3) TOLERANCES: PER DART QSI 018 UNLESS OTHERWISE NOTED
4) UNITS: INCHES UNLESS OTHERWISE NOTED
5) BREAK SHARP EDGES: 0.005 TO 0.010 MAX
6) IDENTIFICATION: IDENTIFY PER QSI 044 6.4
7) WEIGHT: 0.98 lbs
8) TOOLING: THERMOFORM -17 PART PER MOLD DT9716. TRIM PER MOLD
9) MINIMUM ALLOWABLE THICKNESS AFTER THERMOFORMING = 0.040.

D4323-17 COVER

DESIGN		**DART AEROSPACE LTD** HAWKESBURY, ONTARIO, CANADA
DRAWN	BC	
CHECKED		DRAWING NO. D4323 — REV. PA4 — SHEET 10 OF 12
MFG. APPR.		
APPROVED		TITLE PANEL — SCALE NTS
DE APPR.		
DATE 11.02.09		

COPYRIGHT © 2011 BY DART AEROSPACE LTD
THIS DOCUMENT IS PRIVATE AND CONFIDENTIAL AND IS SUPPLIED ON THE EXPRESS CONDITION THAT IT IS NOT TO BE USED FOR ANY PURPOSE OR COPIED OR COMMUNICATED TO ANY OTHER PERSON WITHOUT WRITTEN PERMISSION FROM DART AEROSPACE LTD.

Daryl Leger

From: Harvey Siemens [hsiemens@dartaero.com]
Sent: Thursday, March 03, 2011 4:05 PM
To: 'Daryl Leger'
Cc: dcampbell@dartaero.com
Subject: RE: D4323 parts

Daryl

I think the web should be ok. I believe that it will get trimmed anyways. The larger radius for the -17 part is ok too since its fitting over the cover not inside. Dan can make the necessary changes to the drawings if you need him to. Just let him know.

Thanks for the update

Regards,

Harvey Siemens
Mechanical Designer
DART Aerospace Ltd.

P: 403-717-0328
F: 403-717-1288
E: hsiemens@dartaero.com
W: www.dartaero.com
M: 1060 McTavish Road NE, Calgary, Alberta, T2E 7G6
The information contained in this transmission is privileged and confidential and intended only for the use of the individual or entity to whom it is addressed. If you are not the intended recipient, you are hereby notified that any distribution, copying, disclosure or taking of any action in reliance on the contents of this transmission is strictly prohibited and review by any individual other than the intended recipient shall not constitute waiver of privilege. If you have received this transmission in error, please notify me immediately and delete the original transmission.

From: Daryl Leger [mailto:dleger@dartaero.com]
Sent: March-03-11 1:25 PM
To: Harvey Siemens
Subject: D4323 parts

Hi Harvey

Here's a photo of the **small web that is on the D4323-4 part. The web is about ¾" long**, Will this part be OK to ship?
Also **the D4323-17 part actually has an inside radius of 10-3/4"** and not 10-1/2" as in the PA3 drawing, Is that OK as well?

If your OK with these deviations please flip me an e-mail so that I can attach it to the WO.

Thanks.

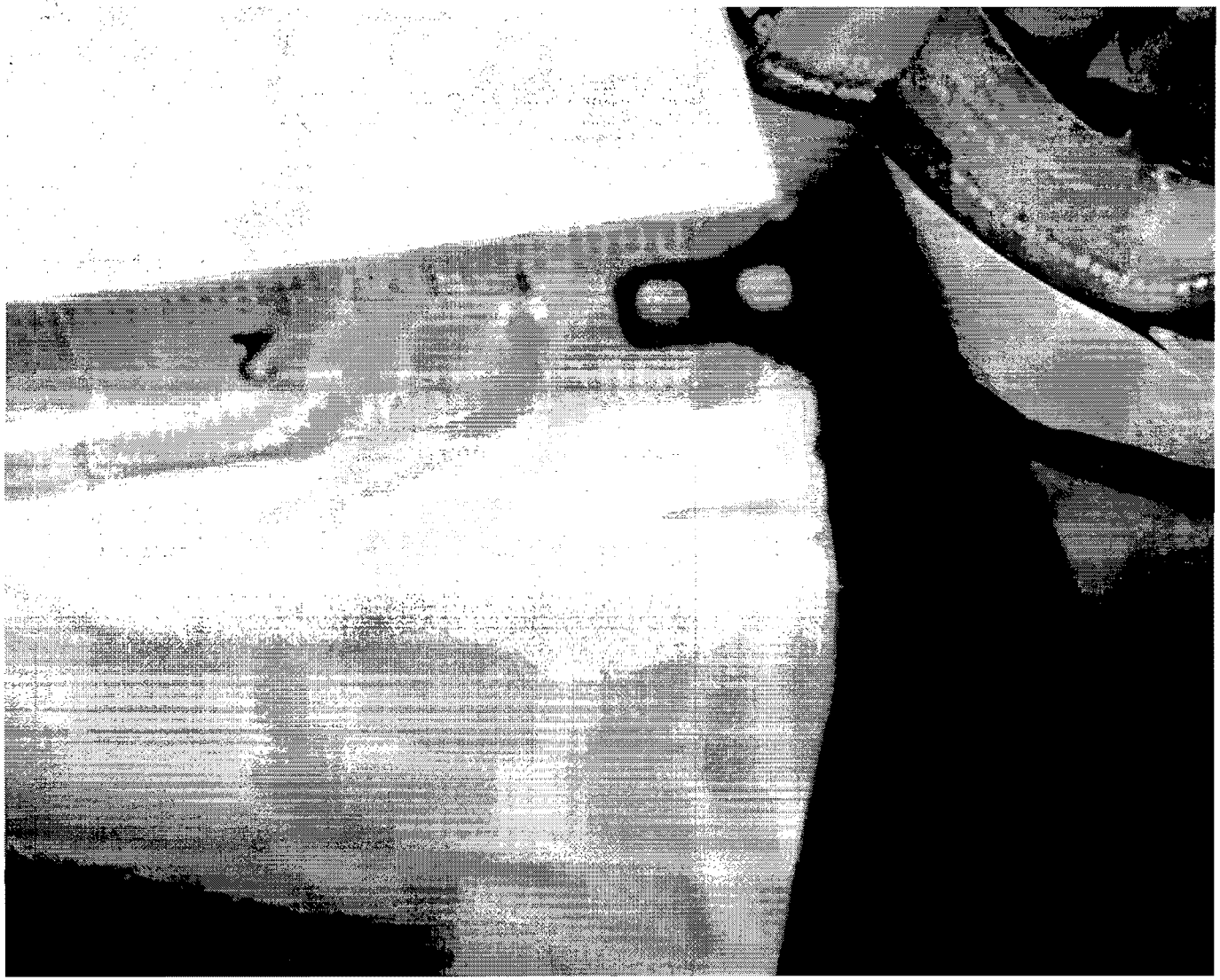

Daryl L. Leger
Production Engineering Co-ordinator
DART
aerospace
TEL: 613-632-5200
FAX: 613-632-1426
EMAIL: dleger@dartaero.com

3/3/2011

Daryl Leger

From: Daniel Campbell [dcampbell@dartaero.com]
Sent: Monday, March 07, 2011 1:52 PM
To: 'Daryl Leger'; 'Harvey Siemens'
Subject: RE: D4323 Parts

Hi Daryl,

I've made the changes to the D4323 dwg based on your email. I changed all the dims for the -17 to 1 decimal place, so that there's a larger tolerance. I also modified the dimensions of the part based on your feedback. The mould dwg DT9716 has been updated as well.

How do the QSIs work for reference dimensions? If a part is dimensionally within the QSIs, except for the reference dimensions, will it pass QC?

I also have created mould dwgs for the LH/RH cabin post covers, and the aft wall panels. Please let me know what the DT numbers should be for these.

So, the new files in the D4323-PA4 Preliminary folder are:

D4323-PA4
DTXXX1-PA1
DTXX19-PA1
DTXX20-PA1
DT9716-PA2

Please mark-up and scan/fax/email any of the dwgs that need corrections.

Thanks,
Daniel

From: Daryl Leger [mailto:dleger@dartaero.com]
Sent: Friday, March 04, 2011 7:40 AM
To: Harvey Siemens
Cc: Daniel Campbell
Subject: D4323 Parts

Good Morning Harvey.

Sorry for the delay in getting these parts to you.
Currently this part will not pass inspection because it doesn't meet tolerances

I am no where near the required dimensions on the drawing for the D4323-17 part. According to the drawing I have to be within 0.030" of every dimension. With the inside radius changed to 10.75" nothing else works.

Please note for future reference. The QSI Tolerances were probably developed for machine parts.
Plastic thermoformed parts will never be within these tight tolerances because of uneven material thickness after forming and unpredictable shrinkages.

With a min thickness of 0.050" and a 0.125" allowable tolerance. this part might pass.
I would have to make the part from much thicker sheet if the 0.080" thickness is a must, and then all the measurements would also change by the increased material thickness.

The actual dimensions on the formed D4323-17 part are as follows.

Drawing Dim	Tolerance	Actual
14.66"	+/- 0.030"	14.75"
Ø 10.50"	+/- 0.030"	10.75"
Ø14.66"	+/- 0.030"	14.75"
9.83"	+/- 0.030"	9.65"
8.54"	+/-0.030"	8.43"
0.080"	Min	0.052"

I know that to you and I are Ok with some of these parts being untrimmed, but I'm sure that I will have the same problem when I do the First Article Inspection on the D4323-3/4 parts.
Quality Control will not pass these parts either.

Please advise what you would like me to do.

Daryl L. Leger
Production Engineering Co-ordinator
DART
aerospace
TEL: 613-632-5200
FAX: 613-632-1426
EMAIL: dleger@dartaero.com

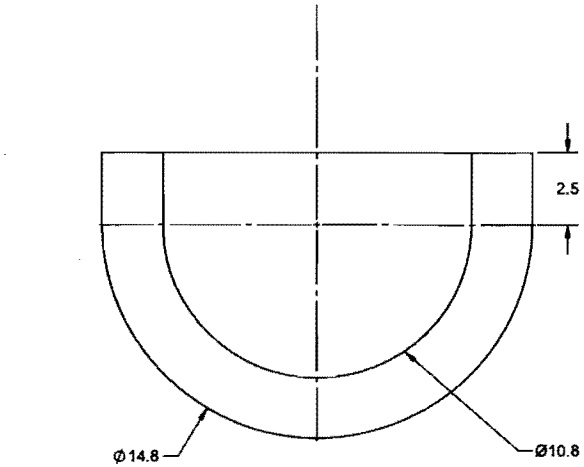

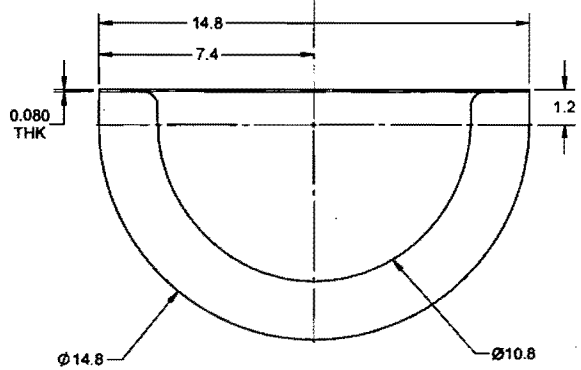

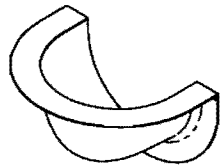

66985

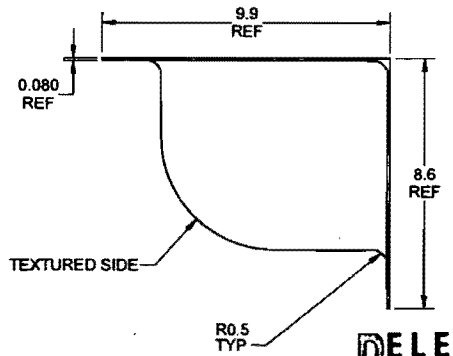

RELEASED
2011 -05- 10

NOTES:
1) MATERIAL: KYDEX 6185, 0.080 THICK, P3-VELOUR MATTE, IVORY #62015
REF DART SPEC MKYD6185S.080-P3-62015
2) FINISH: NONE
3) TOLERANCES: PER DART QSI 018 UNLESS OTHERWISE NOTED
4) UNITS: INCHES UNLESS OTHERWISE NOTED
5) BREAK SHARP EDGES: 0.005 TO 0.010 MAX
6) IDENTIFICATION: IDENTIFY PER QSI 044 6.4
7) WEIGHT: 1.11 lbs
8) TOOLING: THERMOFORM PER MOULD DT9716 AND DART QSI 022. TRIM PER MOULD
9) MINIMUM ALLOWABLE THICKNESS AFTER THERMOFORMING = 0.040.

D4323-17 COVER

DESIGN		DART AEROSPACE LTD HAWKESBURY, ONTARIO, CANADA
DRAWN		
CHECKED		DRAWING NO. D4323 — REV. A — SHEET 10 OF 15
MFG. APPR.		
APPROVED		TITLE: PANEL — SCALE: NTS
DE APPR.		
DATE	11.04.21	

COPYRIGHT © 2011 BY DART AEROSPACE LTD
THIS DOCUMENT IS PRIVATE AND CONFIDENTIAL AND IS SUPPLIED ON THE EXPRESS CONDITION THAT IT IS NOT TO BE USED FOR ANY PURPOSE OR COPIED OR COMMUNICATED TO ANY OTHER PERSON WITHOUT WRITTEN PERMISSION FROM DART AEROSPACE LTD.